REVISIONS				
LTR	DESCRIPTION	BY	APR	DATE
–	–	–	–	–
–	–	–	–	–

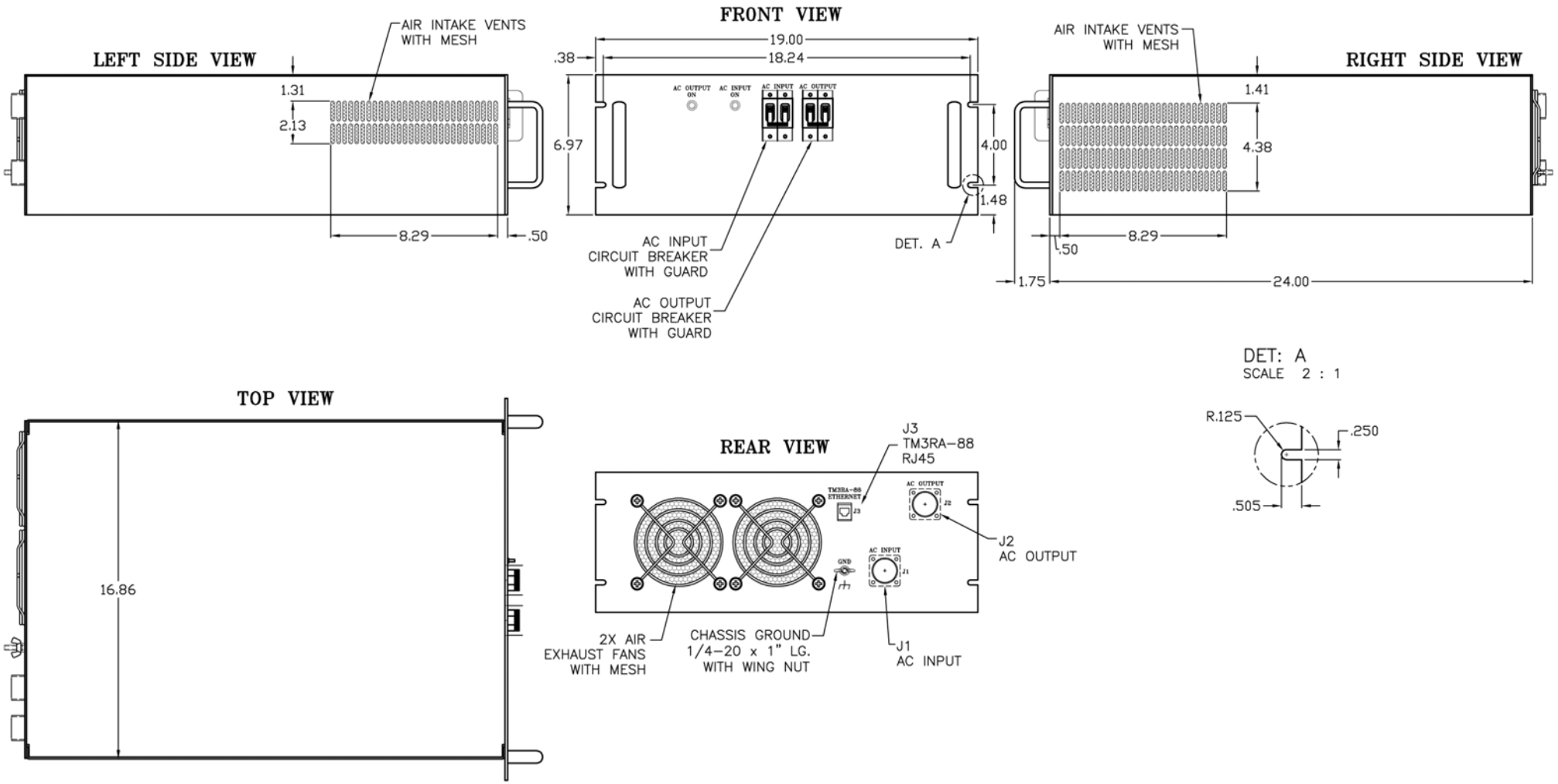

NOTES:
1. ALL DIMENSIONS ARE IN INCHES.
2. EXTERIOR COLOR ANSI #61 GRAY SEMI-GLOSS. (FRONT PANEL ONLY). OTHER SURFACES YELLOW IRRIDITE.
3. APPROXIMATE WEIGHT: 45.00 LBS. (APPROX.)

CONNECTORS PIN DESIGNATION

J1 AC INPUT

MS3102R20-19P	
PIN	DESCRIPTION
A	LINE
B	NEUTRAL
C	GND

J2 AC OUTPUT

MS3102R20-19S	
PIN	DESCRIPTION
A	LINE
B	NEUTRAL
C	GND

THIS DRAWING IN DESIGN AND DETAIL IS POWERTEK PROPERTY AND MUST NOT BE USED EXCEPT IN CONNECTION WITH OUR WORK. ALL RIGHTS OF DESIGN OR INVENTION ARE RESERVED.

THIRD ANGLE PROJECTION

	DRAWN	DATE
	RL	02/28/11
TOLERANCES UNLESS OTHERWISE SPECIFIED	CHECKED BT	02/28/11
.XX = ± .02 .XXX = ± .005 ANGLE = ± 1/2° DIMENSIONS IN INCHES UNLESS OTHERWISE NOTED	APPROVED AL	02/28/11
www.powertekuk.com	DO NOT SCALE	

OUTLINE DRAWING, GLFCPFC 4U CHASSIS

SIZE			REV.
C	9981038		–
	CAGE: 29019	SHEET: 1 of 1	